RE 26088
Edition: 2026-06
Replaces: 2018-01

Pressure sequence valve, direct operated

Type ZDZ



H7648

- Size 6
- Component series 4X
- Maximum operating pressure 210 bar
- Maximum flow 80 l/min

Features

- Sandwich plate valve
- Porting pattern according to ISO 4401-03-02-0-05 (with or without locating hole)
- 3 pressure ratings
- 4 adjustment types, optionally:
  - Rotary knob
  - Grub screw with hexagon and protective cap
  - Lockable rotary knob with scale
  - Rotary knob with scale
- Check valve, optional (version "A" only)

Contents

Features	1
Ordering code	2
Symbols	3
Function, section	4
Technical data	5
Characteristic curves	6
Dimensions	7, 8
Further information	9

Ordering code

01	02	03	04	05	06		07		08	09	10	11	12
Z	**DZ**	**6**	**D**			**–**	**4X**	**/**		**Y**			

01	Sandwich plate valve	**Z**
02	Pressure sequence valve	**DZ**
03	Size 6	**6**
04	Direct operated	**D**
05	Pressure reduction in channel A②	**A**
	Pressure reduction in channel P①	**P** ◇

Adjustment type

06	Rotary knob	**1**
	Grub screw with hexagon and protective cap	**2** ◇
	Lockable rotary knob with scale	**3** [1]
	Rotary knob with scale	**7**
07	Component series 40 ... 49 (40 ... 49: Unchanged installation and mounting dimensions)	**4X**

Pressure rating

08	Maximum sequencing pressure 75 bar	**75**
	Maximum sequencing pressure 150 bar	**150**
	Maximum sequencing pressure 210 bar	**210** ◇
09	Pilot oil supply internal, pilot oil return external	**Y**
10	With check valve (only version "A")	**no code**
	Without check valve	**M** ◇

Seal material (observe compatibility of seals with hydraulic fluid used, see page 5)

11	NBR seals	**no code** ◇
	FKM seals	**V**
12	Without locating hole	**no code** ◇
	With locating hole	**/60** [2]

[1] H-key with material no. **R900008158** is included in the scope of delivery.

[2] Locking pin ISO 8752-3x8-St, material no. **R900005694** (separate order)

☞ **Note:** ◇ = Preferred type

Symbols (① = component side, ② = plate side)

Version **"P...YM"**

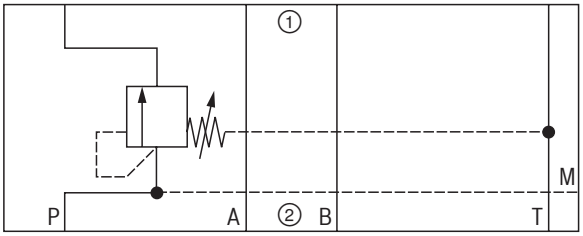

Version **"A...YM"**

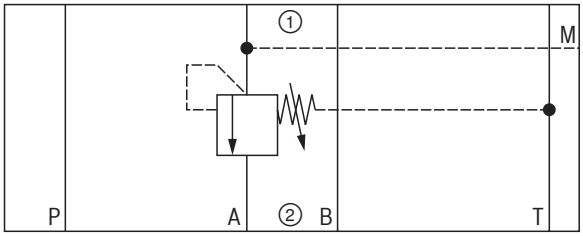

Version **"A...Y"**

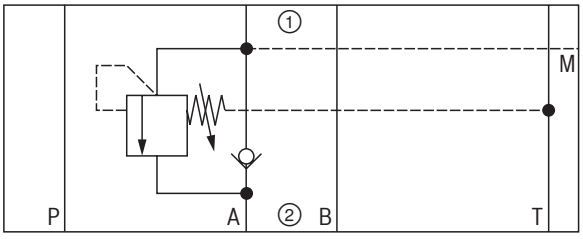

Function, section

Valve type ZDZ is a direct operated pressure sequence valve in sandwich plate design. It is applied for pressure-dependent connection of a second system. The sequencing pressure is set via the adjustment type (4).

Version "P"
The compression spring (3) holds the control spool (2) in the initial position – the valve is blocked. The pressure in channel P② is applied via the control line (5) at the spool face of the control spool (2) opposite the compression spring (3).
If channel P② reaches the set value of the compression spring (3), the control spool (2) is moved to the left and the connection from P② to P① is opened. The system connected to channel P① is connected without a pressure drop in channel P②.

The pilot oil return from the spring chamber (7) is always realized externally via the bore (6) to channel T (Y).
A pressure gauge connection (8) enables control of the sequencing pressure at the valve.

Version "A"
Here, pressure sequencing is realized in channel A.
Control signal and pilot oil are supplied internally from channel A①.
A check valve can be optionally installed for free hydraulic fluid flow back from A② to A①.

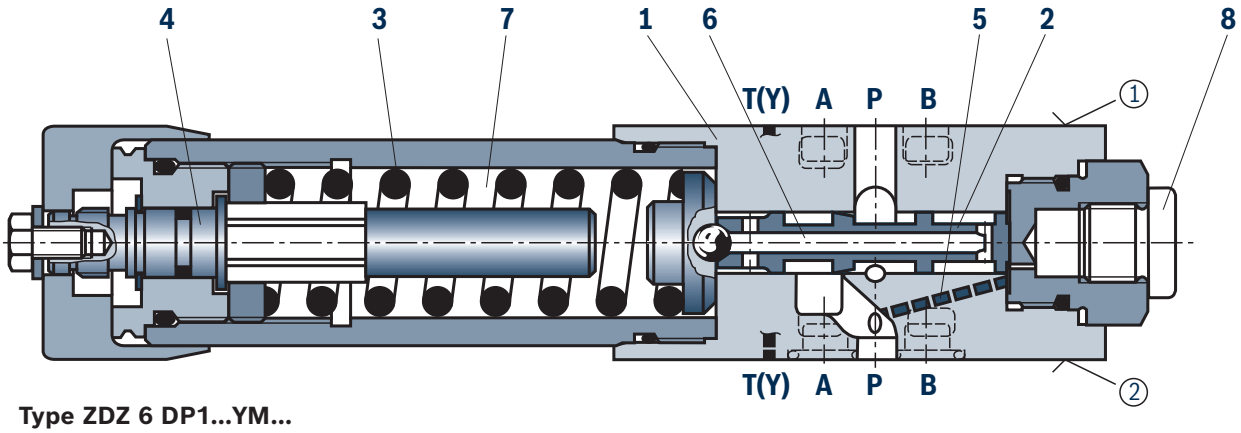

Type ZDZ 6 DP1...YM...

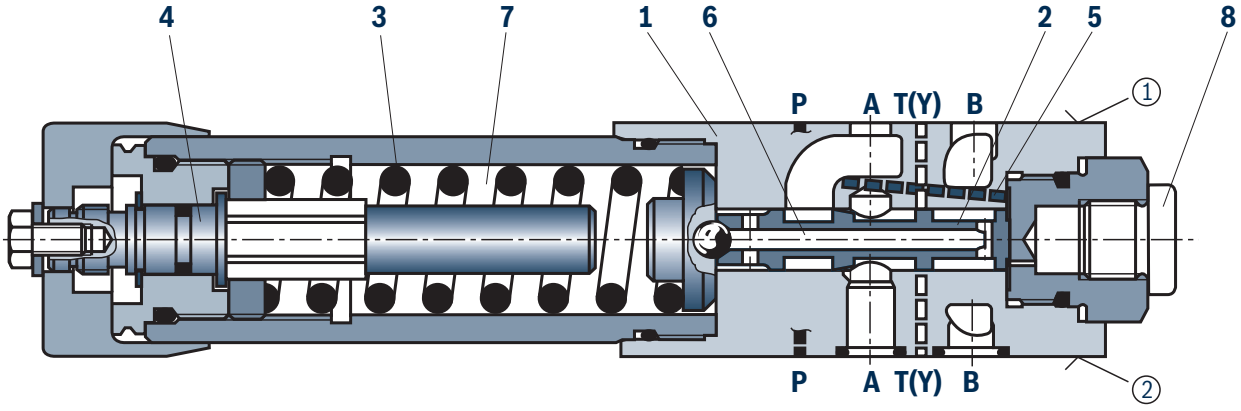

Type ZDZ 6 DA1...YM

① = component side
② = plate side

Technical data
(For applications outside these values, please consult us.)

General			
Weight		kg	1.2
Installation position			Any
Ambient temperature range		°C	–20 ... +80 (NBR seals) –15 ... +80 (FKM seals)
Conformity	▶ RoHS Directive		2011/65/EU [1]

Hydraulic			
Maximum operating pressure	▶ Port P, A, B	bar	210
	▶ Port T(Y)	bar	160
Hydraulic fluid			See table below
Hydraulic fluid temperature range		°C	–20 ... +80 (NBR seals) –15 ... +80 (FKM seals)
Viscosity range		mm^2/s	10 ... 800
Maximum admissible degree of contamination of the hydraulic fluid, cleanliness class according to ISO 4406 (c)			Class 20/18/15 [2]
Maximum flow		l/min	80
Maximum sequencing pressure		bar	75; 150; 210

Hydraulic fluid		Classification	Suitable sealing materials	Standards	Data sheet
Mineral oils		HL, HLP, HLPD, HVLP, HVLPD	NBR, FKM	DIN 51524	90220
Bio-degradable	▶ Insoluble in water	HETG	FKM	ISO 15380	90221
		HEES	FKM		
	▶ Soluble in water	HEPG	FKM	ISO 15380	
Flame-resistant	▶ Water-free	HFDU (glycol base)	FKM	ISO 12922	90222
		HFDU (ester base)	FKM		
		HFDR	FKM		
	▶ Containing water	HFC (Fuchs: Hydrotherm 46M, Renosafe 500; Petrofer: Ultra Safe 620; Houghton: Safe 620; Union: Carbide HP5046)	NBR	ISO 12922	90223

☞ **Important information on hydraulic fluids:**

- For more information and data on the use of other hydraulic fluids, please refer to the data sheets above or contact us.
- There may be limitations regarding the technical valve data (temperature, pressure range, life cycle, maintenance intervals, etc.).
- The ignition temperature of the hydraulic fluid used must be 50 K higher than the maximum surface temperature.
- **Bio-degradable and flame-resistant – containing water:**
  If components with galvanic zinc coating (e.g. version "J3" or "J5") or parts containing zinc are used, small amounts of dissolved zinc may get into the hydraulic system and cause accelerated aging of the hydraulic fluid. Zinc soap may form as a chemical reaction product, which may clog filters, nozzles and solenoid valves – particularly in connection with local heat input.
- **Flame-resistant – containing water:**
  Due to an increased cavitation tendency with the use of HFC hydraulic fluids, the life cycle of the component may be reduced by up to 30% as compared to use with HLP mineral oil. In order to reduce the cavitation effect, it is recommended – if possible considering conditions specific to the installation – to back up the return flow pressure in ports T to approx. 20% of the pressure differential at the component.

[1] The component does not fall within the scope of the RoHS Directive 2011/65/EU, but complies with its substance-related requirements.

[2] The cleanliness classes specified for the components must be adhered to in hydraulic systems. Effective filtration prevents faults and at the same time increases the life cycle of the components.

Characteristic curves
(measured with HLP46, ϑ_{oil} = 40±5 °C)

p-q_V characteristic curves

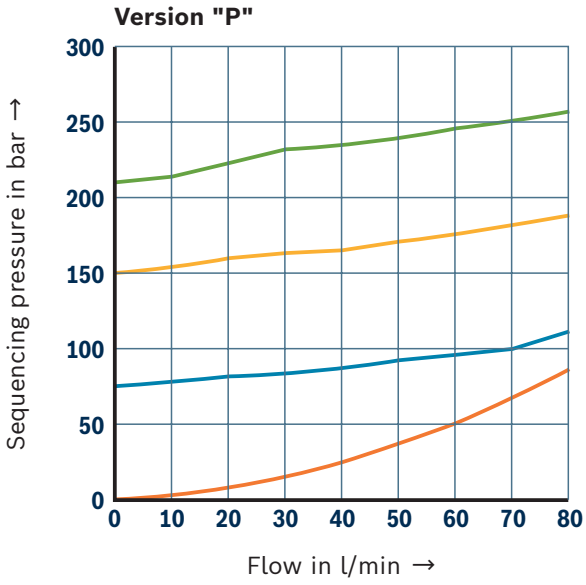

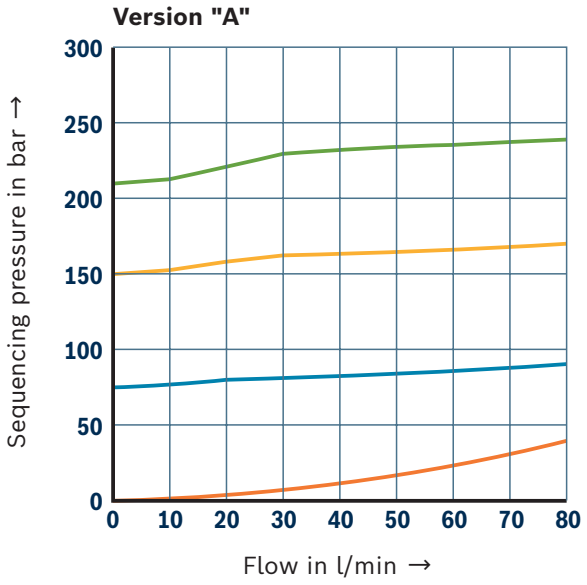

Δp-q_V characteristic curves (version "210"; exemplary for all versions)

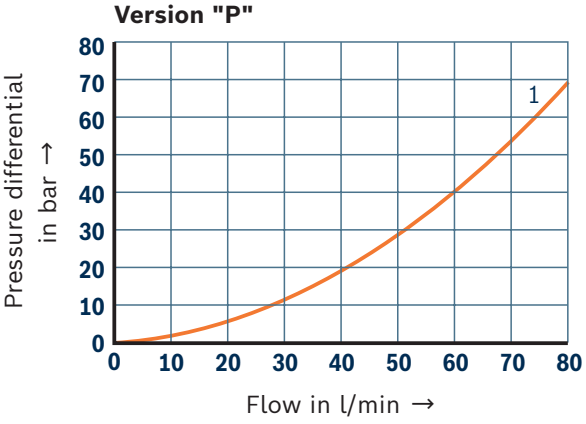

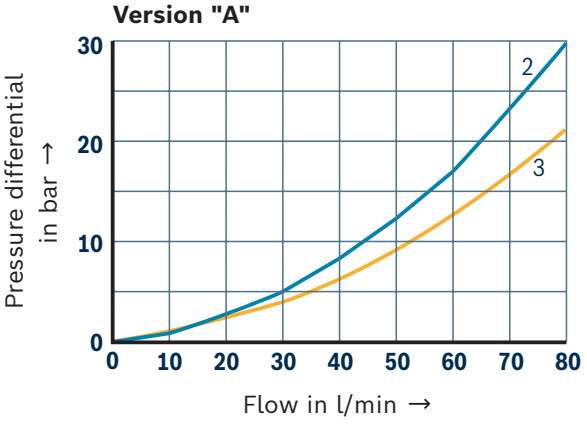

☞ **Notice:**
The characteristic curves apply to the pressure at the valve output p_T = 0 bar across the entire flow range.

1 P②→P①
2 A①→A②
3 A②→A①; flow only via check valve

Dimensions: Version "P"
(Dimensions in mm)

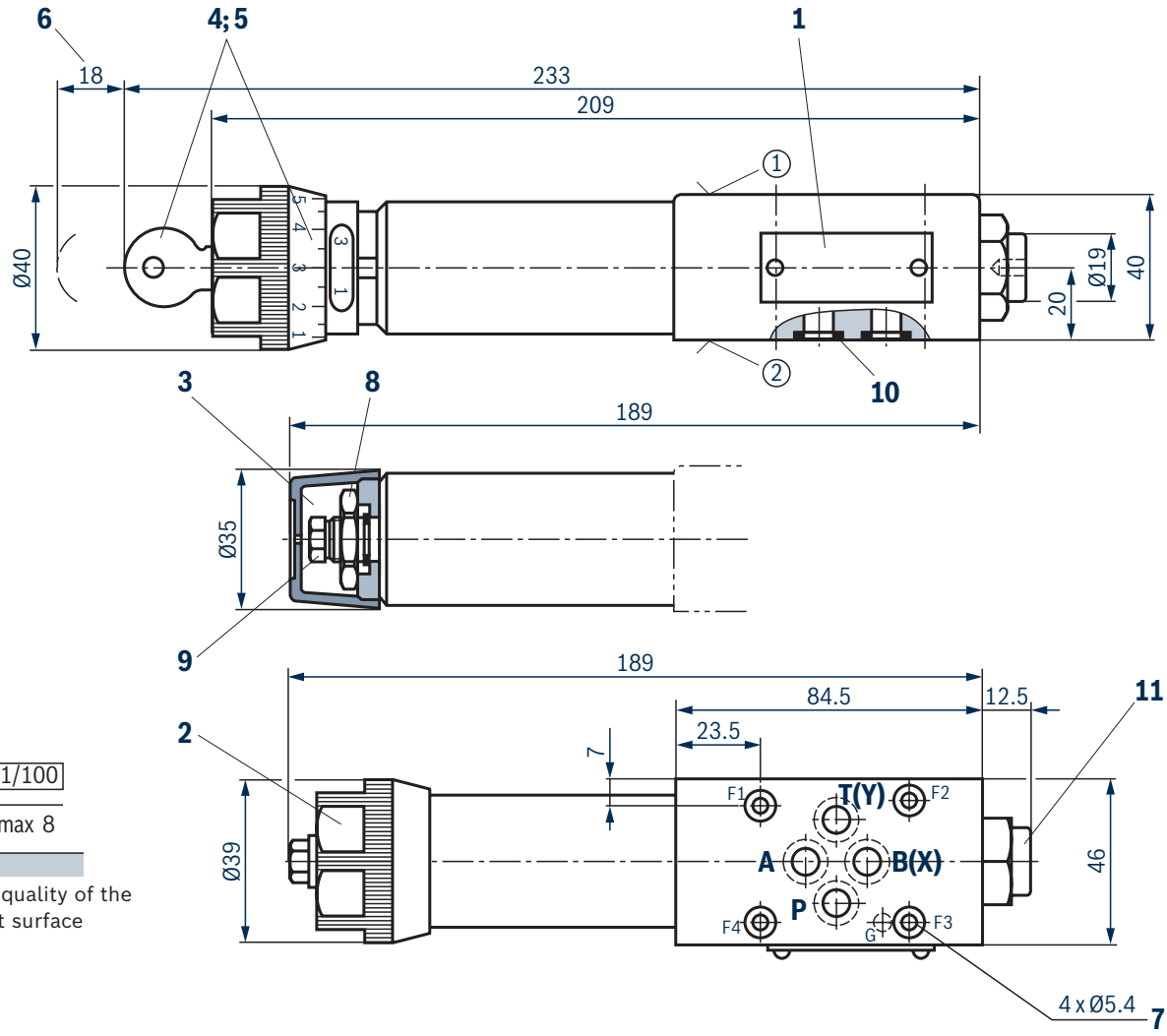

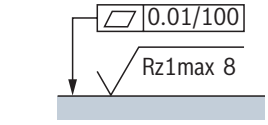

Required surface quality of the valve contact surface

① component side – Porting pattern according to ISO 4401-03-02-0-05 (with or without locating hole); (**with** locating hole Ø4 x 4 mm deep)

② plate side – Porting pattern according to ISO 4401-03-02-0-05 (with or without locating hole); (**with** locating hole for locking pin ISO 8752-3x8-St; separate order, material no. **R900005694**)

1 Name plate
2 Adjustment type "1"
3 Adjustment type "2"
4 Adjustment type "3"
5 Adjustment type "7"
6 Space required to remove the key
7 Valve mounting bores
8 Lock nut, SW24
9 Hexagon, SW10
10 Identical seal rings for ports A, B, P, T(Y)
11 Pressure gauge connection G1/4; 12 deep; internal hexagon SW6

Subplates (separate order) with porting pattern according to ISO 4401-03-02-0-05 see data sheet 45100.

Valve mounting screws (separate order)
4 hexagon socket head cap screws ISO 4762 – M5 – 10.9

☞ **Notice:**
- Length and tightening torque of the valve mounting screws must be calculated in connection with the components mounted underneath and above the sandwich plate valve.
- The dimensions are nominal dimensions which are subject to tolerances.

Dimensions: Version "A"
(Dimensions in mm)

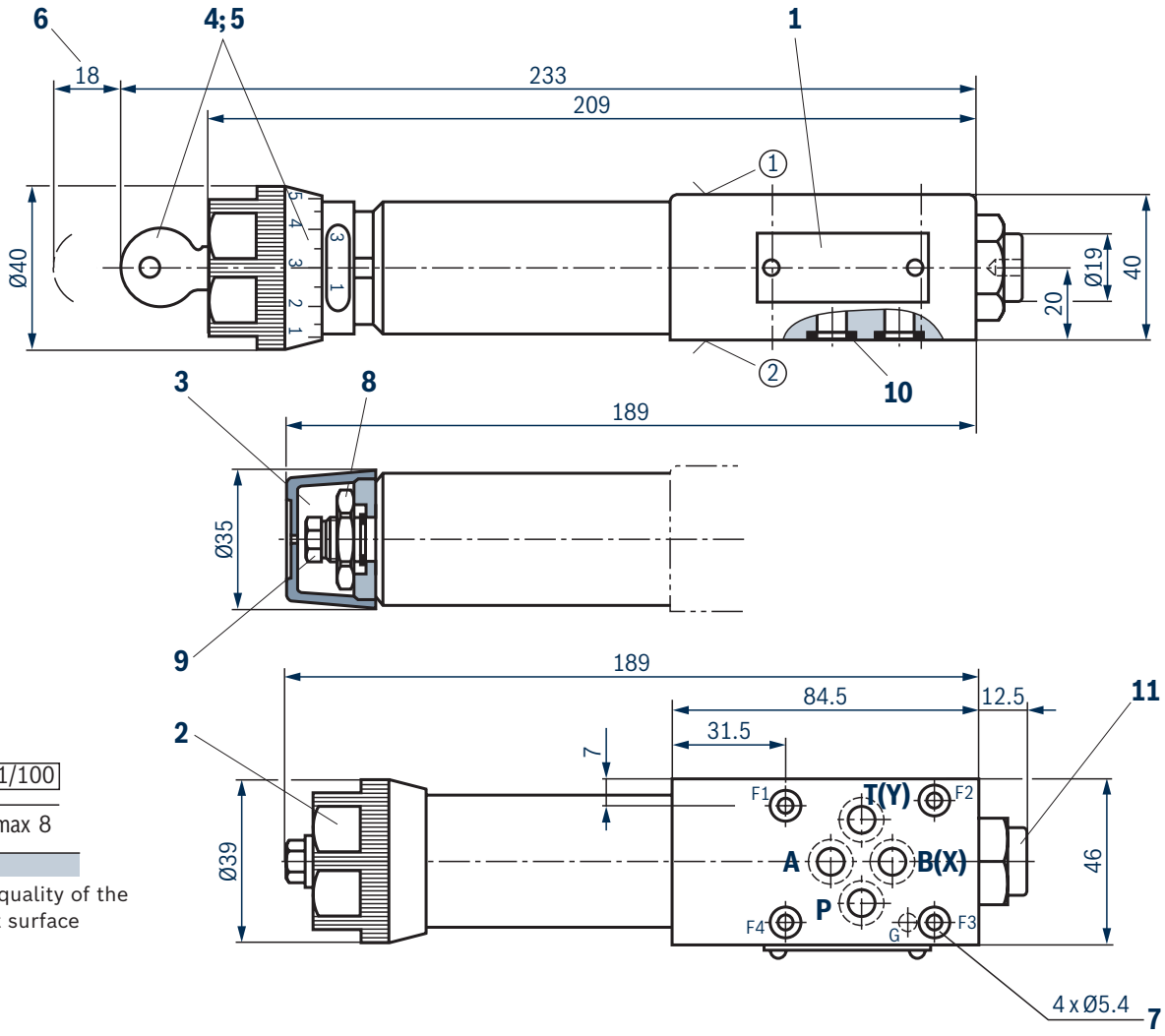

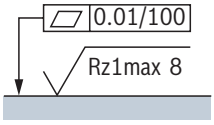

Required surface quality of the valve contact surface

① component side – Porting pattern according to ISO 4401-03-02-0-05 (with or without locating hole); (**with** locating hole Ø4 x 4 mm deep)

② plate side – Porting pattern according to ISO 4401-03-02-0-05 (with or without locating hole); (**with** locating hole for locking pin ISO 8752-3x8-St; separate order, material no. **R900005694**)

1 Name plate
2 Adjustment type "1"
3 Adjustment type "2"
4 Adjustment type "3"
5 Adjustment type "7"
6 Space required to remove the key
7 Valve mounting bores
8 Lock nut, SW24
9 Hexagon, SW10
10 Identical seal rings for ports A, B, P, T(Y)
11 Pressure gauge connection G1/4; 12 deep; internal hexagon SW6

Subplates (separate order) with porting pattern according to ISO 4401-03-02-0-05 see data sheet 45100.

Valve mounting screws (separate order)
4 hexagon socket head cap screws ISO 4762 – M5 – 10.9

☞ **Notice:**
- Length and tightening torque of the valve mounting screws must be calculated in connection with the components mounted underneath and above the sandwich plate valve.
- The dimensions are nominal dimensions which are subject to tolerances.

Further information

▶ Hydraulic valves for industrial applications	Operating instructions 07600-B
▶ Subplates	Data sheet 45100
▶ Hydraulic fluids on mineral oil basis	Data sheet 90220
▶ Environmentally compatible hydraulic fluids	Data sheet 90221
▶ Flame-resistant, water-free hydraulic fluids	Data sheet 90222
▶ Flame-resistant hydraulic fluids – containing water (HFAE, HFAS, HFB, HFC)	Data sheet 90223
▶ Information on available spare parts	www.boschrexroth.com/spc

Notes

Notes

Notes

Bosch Rexroth AG
Industrial Hydraulics
Zum Eisengießer 1
97816 Lohr am Main, Germany
Phone +49 (0) 93 52 / 40 30 20
my.support@boschrexroth.com
www.boschrexroth.com

© All rights reserved to Bosch Rexroth AG, also regarding any disposal, exploitation, reproduction, editing, distribution, as well as in the event of applications for industrial property rights.
The data specified above only serve to describe the product. As our products are constantly being further developed, no statements concerning a certain condition or suitability for a certain application can be derived from our information. The information given does not release the user from the obligation of own judgment and verification. It must be remembered that our products are subject to a natural process of wear and aging.

Bosch Rexroth AG, RE 26088, edition: 2026-06